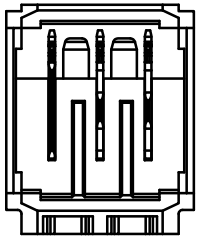

## Kontaktübersicht:
## *contacts overview*

L = lang / *long*
M = mittel / *middle*
S = kurz / *short*

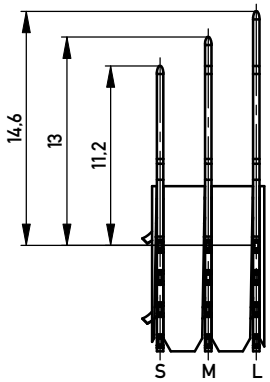


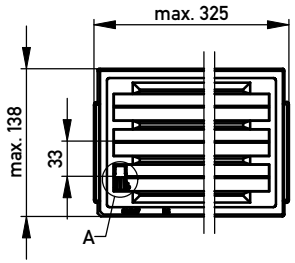


M 1:5

verpackt in Tray
VPE: 72 St.

*tray packaging*
*packaging unit 72 pcs.*

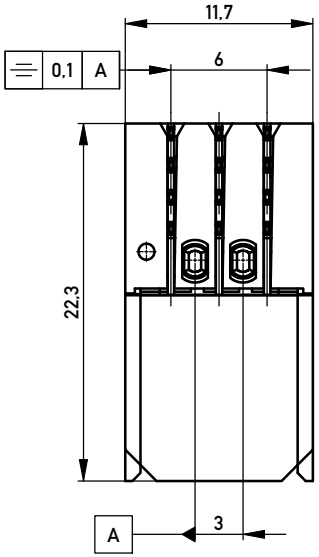


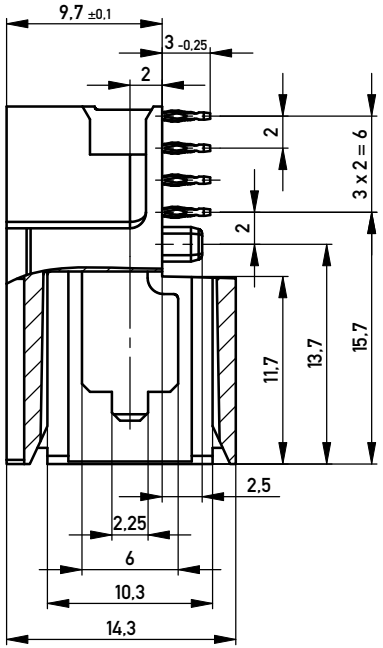


## Bestückungsplan /
## *contact layout*

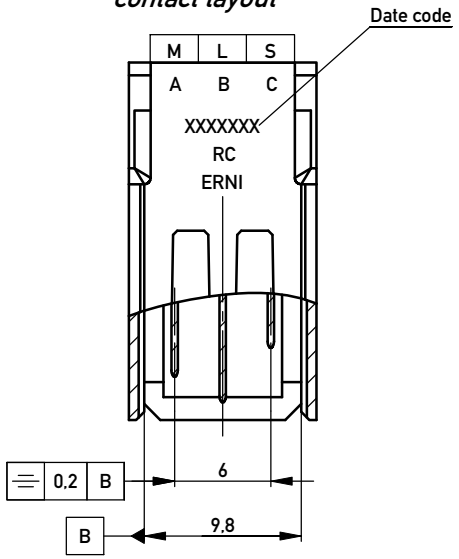


DETAIL A
MAßSTAB 1 : 1

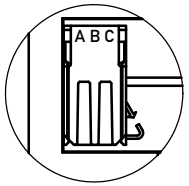


Gehäuse / *housing*: PBTP grau 30% GF / *PBTP grey 30% GF*
Kontakte / *contacts*: Phosphor Bronze / *phosphor bronce*

Oberflächenbeschichtung / *plating*:
Kontaktbereich / *mating area*: 0,65µm PdNi, 0,1µm Au
Anschlussbereich / *termination*: 1,5-3µm Ni, 0,5-2µm Sn matt

Anforderungsstufe 2 / *class 2*

## Lochbild für Leiterplatte /
## *Board hole pattern*

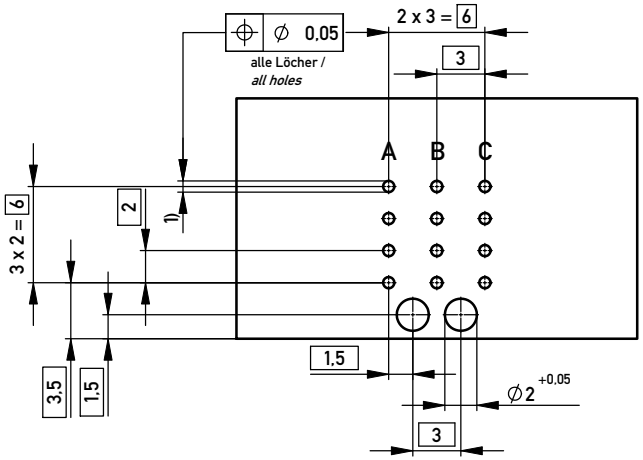


1) Ø0,6 ±0,05 Durchmesser des metallisierten Loches
*Ø 0,6 ± 0,05 Diameter of finished plated-through hole*

Schichtaufbau im metallisierten Loch siehe Zeichnung 114406 / 164062 Nr.1
*Metal plating of plated-through hole see drawing 114406 / 164062 No.1*

| | | | |
|---|---|---|---|
| Information: | Tolerances | All Dimensions in mm | Scale 3:1 |
| All rights reserved. Only for Information. To ensure that this is the latest version of this drawing, please contact one of the ERNI companies before using. | Subject to modification without prior notice. Drawing will not be updated. | | Designation: ERmet Messerleiste PM 14,3 / *ERmet Male PM 14,3* |
| | | ERNI www.ERNI.com | 114403 — I — A3 |
| k — 22.11.2010 | | | Class: ERMPM |
| Index — Date | | | |

Copyright by ERNI GmbH
Proprietary notice pursuant to ISO 16016 to be observed.